GEMAC
Sensorik. Messtechnik. ASIC-Design.

User manual

Inclination Sensors with CAN Bus Interface

Version: 1.2

Date: 2012-05-31

GEMAC - Gesellschaft für
Mikroelektronikanwendung Chemnitz mbH
Zwickauer Straße 227
09116 Chemnitz
Germany

Phone: +49 371 3377 - 0
Fax: +49 371 3377 - 272
E-mail: info@gemac-chemnitz.de
Web: www.gemac-chemnitz.de

Revision History

Date	Revision	Changes
2010-09-16	0	preliminary
2011-07-01	1	first version
2012-05-31	2	sensor with metal housing added, critical damped digital filter added

This document is subject to change without notice.
We constantly work to further develop of our products. We reserve any changes of the scope of delivery in shape, equipment and technology for ourselves. No claims can be made from the details, illustrations and descriptions in this document.
Any kind of duplication, reprocessing and translation of this document as well as excerpts from it require the written permission of GEMAC mbH.
All rights according to the copyright remain explicitly reserved for GEMAC mbH.

Note:
To use the inclination sensors, and for proper understanding of this manual, general knowledge of the field bus system CAN is required.

Table of Contents

List of Tables

List of Figures

1 Overview

1.1 Characteristics

- 1-dimensional inclination sensor with measurement range: 360°
- 2-dimensional inclination sensor with measurement range: ±90° (X/Y)
- High sampling rate and bandwidth
- High resolution (0.01°) and accuracy (0.05°)
- Compensated temperature coefficient for metal housing
  (10x improved temperature coefficient to plastic housing)
- Compensated cross sensitivity
- Programmable vibration suppression
- Comfortable CAN Bus interface:
  - Freely selectable IDs
  - Baud rates from 10 kBit/s to 1 MBit/s
  - Automatic baud rate detection
- Functions:
  - Position request, cyclical output, synchronized output
  - Configurable cut-off frequency (digital filter)
- Metal housing with stainless steel base plate or UV resistant, impact strength plastic housing
- Suitable for industrial use:
  - Temperature range: -40 °C to +80 °C
  - Degree of protection: IP65/67

The inclination sensor IS1D 00 P20 is suitable to measure the inclination in the measurement range of 360°. The 2-dimensional inclination sensor IS2D 90 P20 is suitable to measure the inclination in 2 dimensions (X/Y) in the measurement range of 90°. To ensure a high accuracy, the sensors are calibrated at the factory.

The compact and robust design makes the sensor a suitable angle measurement device in rough surroundings for different applications in industry and vehicle technology. A simple configuration and putting into operation is possible by the standardized CAN Bus interface.

1.2 Applications

- Solar thermal and photo-voltaic systems
- Agricultural and forestry machinery
- Construction machinery
- Crane and hoisting technology

2 Technical Data

General Parameters[1]	
Measurement range	360°, ±90°
Resolution	0.01°
Accuracy (Type: IS1D 00 P20)	Range typical maximum 0...360° ±0.04° ±0.10°
Accuracy (Type: IS2D 90 P20)	Range typical maximum up to ±60° ±0.02° ±0.05° up to ±70° ±0.04° ±0.10° up to ±80° ±0.08° ±0.20° up to ±85° ±0.16° ±0.40°
Cross Sensitivity[2] (compensated)	typ. ±0.10 %, max. ±0.50 %
Temperature coefficient (zero point)	Metal housing: typ. ±0,0008 °/K (typ. < ±0.10° over range -40 °C … +80 °C) Plastic housing: typ. ±0,0080 °/K
Sampling rate	80 Hz
Cut-off frequency	typ. 20 Hz, 2nd order (without digital filter) / 0.1 ... 25 Hz, 8th order (with digital filter)
Operating temperature	-40 °C to +80 °C
Characteristics	
Interface	CAN 2.0 A and B (11- and 29-Bit-ID) according to ISO 11898-2
Data rates	10 k, 20 k, 50 k, 62.5 k, 100 k, 125 k, 250 k, 500 k, 800 k Bit/s, 1 MBit/s automatic detection
Functions	Angle request, cyclical and synchronized outputs, parametrization, digital filter (Butterworth lowpass, 8th order), configuration via CAN
Electrical Parameters	
Supply voltage	8 to 48 VDC
Current consumption	Metal housing: <200 mA @ 24 V (PPeak ≤4,8 W) Plastic housing: <33 mA @ 24 V
Mechanical Parameters	
Connector CAN	2x sensor connector 5-pole M12 (loop through connector)
Degree of protection	IP65/67
Dimensions / Weight	Metal housing: 82 mm x 82 mm x 25 mm / ca. 310 g Plastic housing: 66 mm x 90 mm x 36 mm / ca. 215 g
CE conformity to EC Directive 2006/42/EC	
EC Directives	
RL 2004/108/EC	EMC Directive
RL 2006/95/EC	Low Voltage Directive (LVD)
Harmonized standards	
DIN EN 50498:2010	Electromagnetic compatibility (EMC) - Product family standard for aftermarket electronic equipment in vehicles
EN 60950-1:2006/A1:2010	Information technology equipment. Safety. General requirements
EN ISO 14982:2009	Agricultural and forestry machinery. Electromagnetic compatibility. Test methods and acceptance criteria
DIN EN 13309:2010	Construction machinery - Electromagnetic compatibility of machines with internal power supply

Table 1: Technical Data

1 All indicated angle accuracies are valid after a running time of 10 minutes at 25 °C, Cut-off frequency 0.3 Hz
Absolute calibration accuracy (at 25 °C): ±0.05°

2 type only: IS2D 90 P20

Electromagnetic Compatibility (EMC)	
Transient Emissions	
Radiated disturbance / Radio field strength	Limit curves broadband and narrowband EN ISO 14982 (agricultural and forestry machinery) respectively EN ISO 13309 (construction machinery) 30 ... 1000 MHz (vertical and horizontal)
Immunity to Radio Frequency Fields (RF fields)	
Strip line according to ISO 11452-5	Limits according to EN ISO 14982 (agricultural and forestry machinery) respectively EN ISO 13309 (construction machinery) 20 ... 400 MHz 200 V/m (1 KHz AM) Performance criteria A
Anechoic chamber according to ISO 11452-2	Limits according to EN ISO 14982 (agricultural and forestry machinery) respectively EN ISO 13309 (construction machinery) 200 ... 1000 MHz vertical / 400 ... 1000 MHz horizontal 100 V/m (1 KHz AM) Performance criteria A
Immunity to Conducted Disturbances (on-board power supply 24 VDC)	
Test pulse according to ISO 7637-2:2004	Test pulse / Severity level / Performance criteria 1 -450 V / III / C 2a +37 V / III / B 2b +20 V / III / C (B*) 3a -150 V / III / A 3b +150 V / III / A 4 -12 V / III / A 5a +70 V / Ri = 1 Ω (10 Ω*) / A 5b +36 V / Ri = 0,5 Ω / A
Immunity to Electromagnetic Discharge (ESD)	
ESD according to ISO 10605:2008	Limits according to EN ISO 14982 (agricultural and forestry machinery) respectively EN ISO 13309 (construction machinery) discharge combination 330 pF / 330 Ω Contact discharge 8 KV bipolar (metallic parts) Air discharge 15 KV bipolar Performance criteria A

Table 2: Electromagnetic Compatibility (EMC)

* Metal housing

3 Mounting

3.1 Position of Drilling Holes

The four drilling holes to mount the sensor (Figure 1 and Figure 4) are situated in the base plate of the inclination sensor.

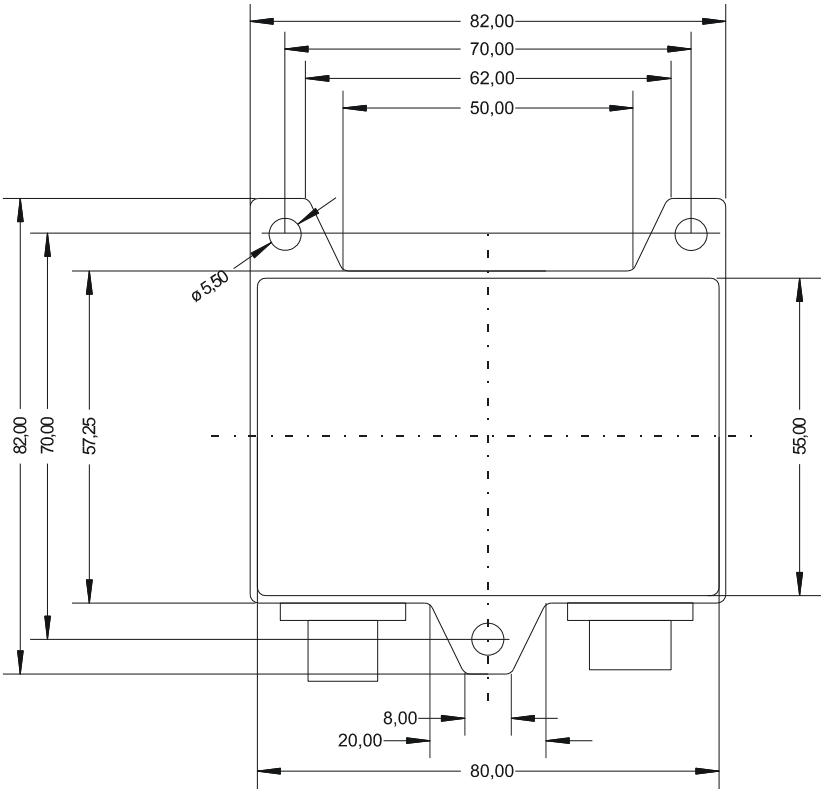

Figure 1: Dimensioned Sketch of metal housing

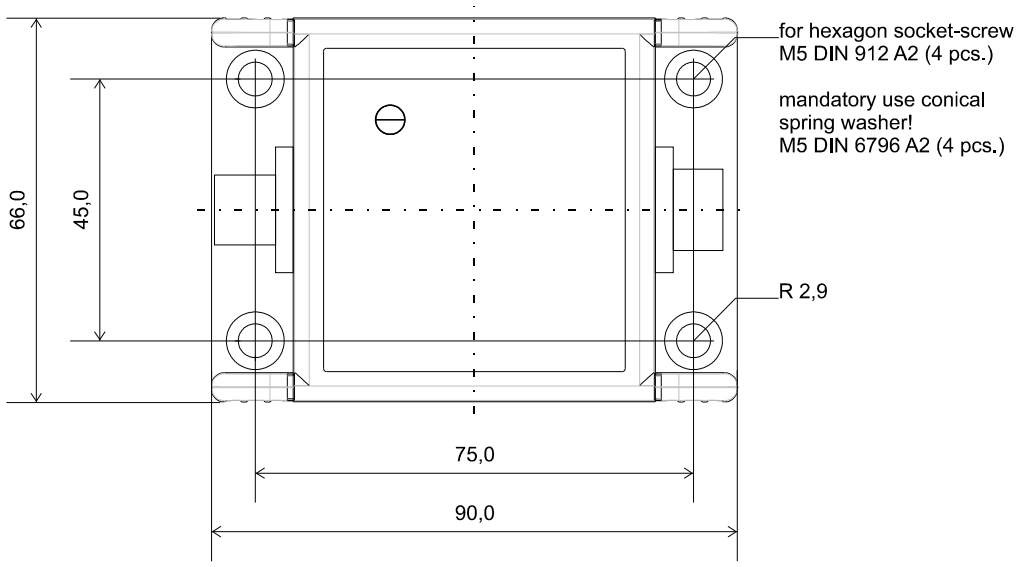

Figure 2: Dimensioned Sketch of plastic housing

3.2 Definition of the Axes

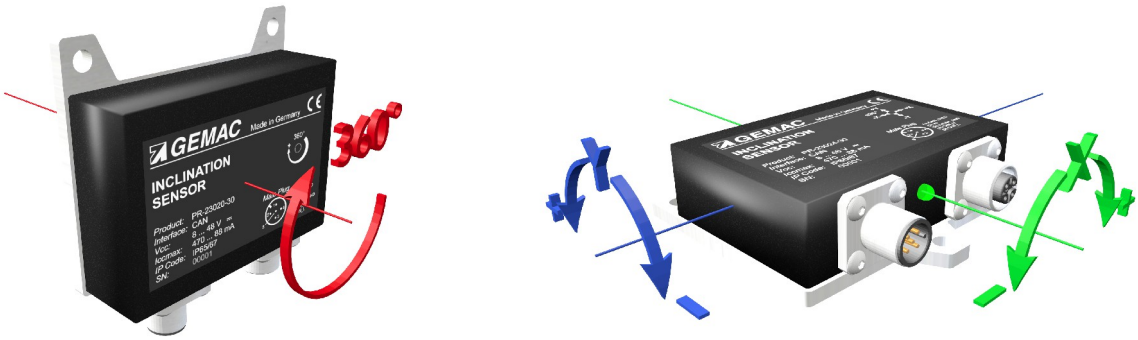

Figure 3: Definition of the Axes metal housing (factory default settings)

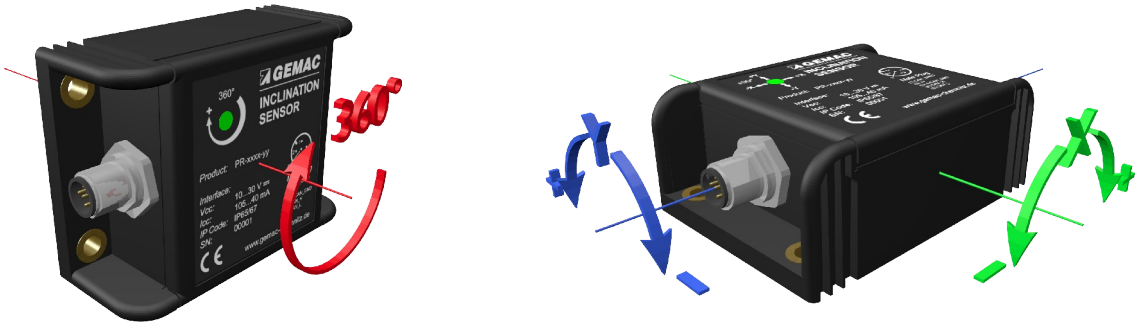

Figure 4: Definition of the Axes plastic housing (factory default settings)

4 Connection

4.1 Connector Pin Out

The inclination sensors IS1D 00 P20 and IS2D 90 P20 are equipped with a common 5-pole round plug M12 (A-coded). The pin allocation fulfills CiA DR-303-1 (Figure 5).

Pin	Signal	Allocation
1	CAN_SHLD	Shield
2	CAN_V+	Supply voltage (+24 V)
3	CAN_GND	GND / 0 V / V-
4	CAN_H	CAN_H bus line
5	CAN_L	CAN_L bus line

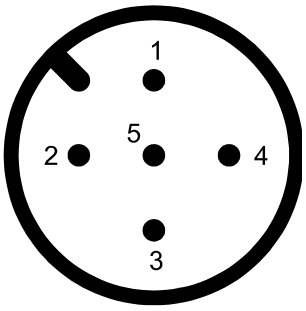

(View from the outside)

Figure 5: Connector Pin Out CAN Bus

4.2 Bus-Termination Resistor

The inclination sensors contain no internal termination resistor.

5 Functional description

5.1 Digital Filter

The inclination sensor offers the possibility to suppress the influence of external disturbing vibrations. The internal lowpass digital filters (8th order) are programmable down to 0.1 Hz. The sensor has two digital filters that can be selected according to the application of the sensor.

Filter	Adjustable frequency range	Applications
Butterworth	0,1 Hz ... 25 Hz	Static inclination measurement with high damping to vibration
Critical damped	0,1 Hz ... 8 Hz	Inclination measurement in applications that requires a certain dynamism, without overshoot at angle changes with good damping

Table 3: Filter selection

The cut-off frequency is programmable by FSC = 26h (Set Parameter Frame). Values for CF are allowed between 100 (= 0.1 Hz) and 25000/8000 (= 25 Hz/8 Hz). The filter type is selected with the parameter FT.

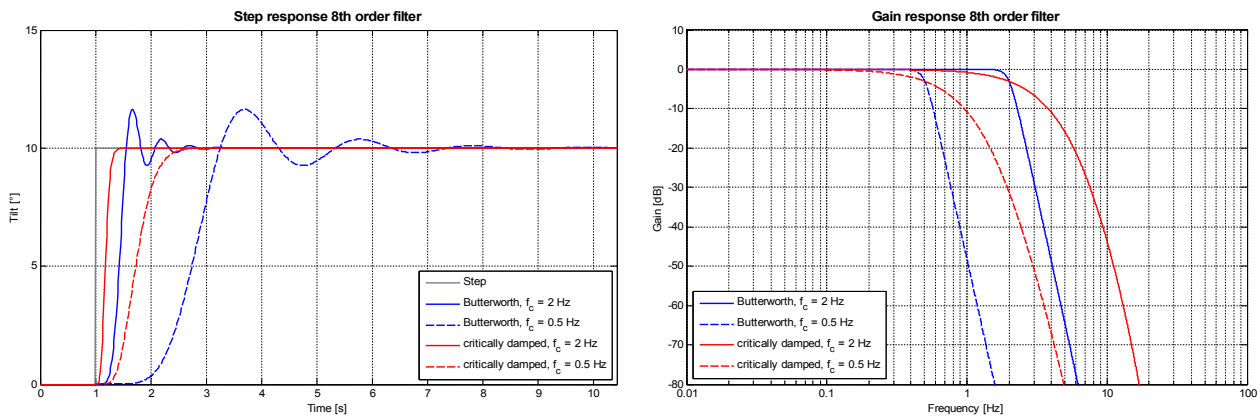

Figure 6: Impulse and amplitude response of the two filters

5.2 Zero Point Adjustment

For all inclination sensors, the zero point can be adjusted. This allows to set the zero position in the installed state of the sensor. Therefore the inclination sensors have a memory for a zero offset. Here registered values are added to the output of the internal measured inclination value.

In case of setting the current position as zero point, the current measured inclination value must be set as negative value in the zero offset register. The inclination sensor is able to perform this kind of Zero Point Adjustment equal to itself (Automatic Zero Point Adjustment). This requires the user to send a telegram **without** parameters (FSC = 27h/28h, DLC = **1**). The sensor then sets the current position at the time of receipt of the telegram as negative value in the zero offset register.

5.3 Active compensation of thermal accuracy shift

The inclination sensor in metal housing features opposed to the sensor in plastic housing an active compensation of accuracy shift. This is improved by maintaining the sensor element at a constant temperature which is independent of the operation temperature of the inclination sensor.

5.4 Status LED

The integrated two-color Status LED signals the recent device state (Run LED, green) as well as CAN communication errors that might have occurred (Error LED, red). The color and the flashing frequency of the LED distinguish the different device states as shown in Table 4.

Status LED		
Run LED	**LED state**	**Description**
○ ○ ○ ○ ○ ○ ○ ○ ○ ○ ○ ○...	Off	The device is in state Reset or no power supply is connected
✹ ✹ ✹ ✹ ✹ ✹ ✹ ✹ ✹ ✹ ✹ ✹...	Flickering	Automatic baud rate detection is currently running (active)
● ● ● ● ● ● ● ● ● ● ● ●...	On	The device is in normal operating state
Error LED	**LED state**	**Description**
○ ○ ○ ○ ○ ○ ○ ○ ○ ○ ○ ○...	Off	The device is in working condition
● ○ ○ ○ ○ ○ ● ○ ○ ○ ○ ○...	Single Flash	CAN Warning Limit reached
● ● ● ● ● ● ● ● ● ● ● ●...	On	The device is in state Bus-Off

Legend: ○ LED off ● LED on ✹ LED flickering (50 ms on/off) Duration of ○/●: 200 ms

Table 4: Status and Error Display through Status LED

5.5 Format of the CAN Frames

For reading/writing device parameters and to read the inclination values a CAN-ID exist for receiving data/commands and one CAN-ID to send the response/confirmation. These IDs are saved in an internal permanent memory (EEPROM) and can be configured freely. CAN 2.0 A (Standard Frame Format) as well as CAN 2.0 B (Extended Frame Format) are supported.

5.5.1 Data Part in the CAN Frame

The data part of all transmission and receipt frames always contains a function select code (FSC) and additionally up to seven data bytes depending on the FSC. The length of the data part of the CAN frame is defined in the DLC field (Data Length Code). The general format of the data part is structured as follows:

Byte0	Byte1	Byte2	Byte3	Byte4	Byte5	Byte6	Byte7
FSC	D0/Status	D1	D2	D3	D4	D5	D6

Table 5: Format of the CAN Frames

FSC: **F**unction **S**elect **C**ode – Function code (detailed description in the sections about the operation modes). Each frame of the inclination sensor always contains the FSC of the preceding request as confirmation.

D0-D7: Data bytes, depending on the function select code

Status: Status information which is included in each frame output by the inclination sensor (see section 5.5.2 „Status Byte (STATUS)“).

Frames which are transmitted to the inclination sensor may contain further data bytes beyond the needed ones – those will not be evaluated. Frames sent by the inclination sensor only contain the data bytes defined by the function select code.

5.5.2 Status Byte (STATUS)

Each frame output by the inclination sensor contains the recent status of the device in Byte1 of the CAN frame. The status byte is structured as follows:

Bit7	Bit6	Bit5	Bit4	Bit3	Bit2	Bit1	Bit0
reserved	Accuracy Warning	reserved	Sensor Error	CmdParam Error	EEPROM Error	Autobaud Detection	Default Param

Table 6: Status Byte, type only: IS1D 00 P20

Bit7	Bit6	Bit5	Bit4	Bit3	Bit2	Bit1	Bit0
reserved	Accuracy Warning	SensorY Error	SensorX Error	CmdParam Error	EEPROM Error	Autobaud Detection	Default Param

Table 7: Status Byte, type only: IS2D 90 P20

DefaultParam: The standard device parameters are set. This bit is reset only when a device parameter was changed to a different value from the factory parameter. The inclination sensors are supplied with the standard device parameters, so this bit is set by default (refer to section 5.8 „Default Device Parameters“).

AutobaudDetection: The baud rate is set to automatic detection (BR = 0). refer to section 5.10.3 „Configuration of the Baud Rate“.

EEPROMError: While reading/writing on the EEPROM an error occurred, for example data loss. The correct function of the inclination sensor is no longer guaranteed. This bit is reset by reading of the status byte (Set Parameter Telegram with FSC = 02h).

CmdParamError: A received frame contained a command or parameter error (invalid FSC, too less data bytes, invalid values). This bit is also set if an error occurred in the execution of a function (for example writing/reading error on EEPROM). It will be reset by reading of the status byte (Set Parameter Frame with FSC = 02h).

SensorError: type only IS1D 00 P20: The sensor of the measuring axis is located outside of the tolerable value range (limit). The angle value can be incorrect. This bit is reset automatically if the sensor is inside its measuring range again.

SensorErrorX: type only IS2D 90 P20: The sensor of the X-axis is located outside of the tolerable value range (limit). The angle value can be incorrect. This bit is reset automatically if the sensor is inside its measuring range again.

SensorErrorY: type only IS2D 90 P20: Error bit of the sensor of the Y-axis (like SensorErrorX).

AccuracyWarning This bit is reset only, when the constant temperature for temperature compensation is reached. Only in this case the accuracy values from the technical specification are valid.

5.6 Boot Up Message

After device reset (hardware or software reset) the inclination sensor outputs a “boot up” message twice. With this the correct boot process is displayed and the Set-Parameter-ID is notified (CAN-ID on that the inclination sensor can be parametrized). This frame contains the following information:

“Boot up“ message after device reset: Reply-Parameter-ID (default ID: 301h)

FSC	D0	D1	D2	D3	D4	D5	D6
FFh	Status	SID0	SID1	SID2	SID3	SWV0	SWV1

Table 8: “Boot Up” Message

SID0-3: Set-Parameter-ID (description in section 5.7 „Read/Write device parameters“)

SWV0-1: Software version

Format: 16 bit unsigned integer value

Example: 67h = 103 (corresponds to v01.03)

5.7 Read/Write device parameters

All parameters like inclinations values, CAN-IDs, Baud Rate, Cyclic Time etc. can be set and requested via the **Set Parameter Frame**s (Request frame). The inclination sensor confirms each frame with a **Reply Parameter Frame** which also contains the needed data according to FSC. (Reply frame).

5.7.1 Set Parameter Frame

Table 9 shows all the supported function select codes and the parameters of a Set Parameter Frame.

FSC	D0	D1	D2	D3	D4	D5	D6	Description	
00h	-	-	-	-	-	-	-	Read inclin. values (incl. cyclic counter in Cyclic Mode)	
02h	-	-	-	-	-	-	-	Read status	
03h	-	-	-	-	-	-	-	Read product number and revision	
04h	-	-	-	-	-	-	-	Read serial number and software version	
10h	-	-	-	-	-	-	-	Set-Parameter-ID	Read device parameters
11h	-	-	-	-	-	-	-	Reply-Parameter-ID	
12h	-	-	-	-	-	-	-	Sync-ID	
13h	-	-	-	-	-	-	-	Baud Rate	
14h	-	-	-	-	-	-	-	Automatic Bus-Off Recovery	
15h	-	-	-	-	-	-	-	Cyclic Time	
16h	-	-	-	-	-	-	-	Cyclic Mode	
17h	-	-	-	-	-	-	-	Cut-off Frequency Digital Filter, Filter selection	
18h[1]	-	-	-	-	-	-	-	Zero Offset	
18h[2]	-	-	-	-	-	-	-	Zero Offset X	
19h[1]	-	-	-	-	-	-	-	Zero Offset Y	
20h	ID0	ID1	ID2	ID3	-	-	-	Set-Parameter-ID*	Write device parameters
21h	ID0	ID1	ID2	ID3	-	-	-	Reply-Parameter-ID*	
22h	ID0	ID1	ID2	ID3	-	-	-	Sync-ID*	
23h	BR	-	-	-	-	-	-	Baud Rate*	
24h	ABOR	-	-	-	-	-	-	Automatic Bus-Off Recovery	
25h	CYT0	CYT1	-	-	-	-	-	Cyclic Time	
26h	CYM	-	-	-	-	-	-	Cyclic Mode	
27h	CF0	CF1	FT	-	-	-	-	Cut-off Frequency Digital Filter, Filter selection	
28h[2]	OF0	OF1	-	-	-	-	-	Zero Offset	
28h[1]	OFX0	OFX1	-	-	-	-	-	Zero Offset X	
29h[1]	OFY0	OFY1	-	-	-	-	-	Zero Offset Y	
40h	'L'	'O'	'A'	'D'	-	-	-	Load default device parameters (factory defaults)	
50h	'S'	'A'	'V'	'E'	-	-	-	Write device parameters in EEPROM	
FFh	'R'	'E'	'S'	'E'	'T'	-	-	Software reset	
FFh	-	-	-	-	-	-	-	Read alive frame (“Boot Up” Message)	

Table 9: Supported FSC and Parameters of the Set Parameter Frames (Request)

1 type only: IS1D 00 P20

2 type only: IS2D 90 P20

* Changes to communication parameters such as ID and Baud Rate will take effect after reboot.

5.7.2 Reply Parameter Frames

Each Reply Parameter Frame contains the identical FSC as confirmation to the correctly received Set Parameter Frame. The error bits of the status byte indicate insufficient or invalid parameters or errors that occurred while writing into the nonvolatile memory. (refer to section 5.5.2 „Status Byte (STATUS)“). The structure of the Reply Parameter Frames in dependence to the FSC is shown in Table 10.

FSC	D0	D1	D2	D3	D4	D5	D6	Description	
00h	Status	WX0	WX1	WY0	WY1	(CNT0)	(CNT1)	Read inclin. values (incl. cyclic counter in Cyclic Mode)	
02h	Status	-	-	-	-	-	-	Read status	
03h	Status	PR0	PR1	PR2	PR3	RV0	RV1	Read product number and revision	
04h	Status	SN0	SN1	SN2	SN3	SWV0	SWV1	Read serial number and software version	
10h	Status	ID0	ID1	ID2	ID3	-	-	Set-Parameter-ID	Read device parameters
11h	Status	ID0	ID1	ID2	ID3	-	-	Reply-Parameter-ID	
12h	Status	ID0	ID1	ID2	ID3	-	-	Sync-ID	
13h	Status	BR	-	-	-	-	-	Baud Rate	
14h	Status	ABOR	-	-	-	-	-	Automatic Bus-Off Recovery	
15h	Status	CYT0	CYT1	-	-	-	-	Cyclic Time	
16h	Status	CYM	-	-	-	-	-	Cyclic Mode	
17h	Status	CF0	CF1	FT	-	-	-	Cut-off Frequency Digital Filter, Filter selection	
18h[1]	Status	OF0	OF1	-	-	-	-	Zero Offset	
18h[2]	Status	OFX0	OFX1	-	-	-	-	Zero Offset X	
19h[2]	Status	OFY0	OFY1	-	-	-	-	Zero Offset Y	
20h	Status	-	-	-	-	-	-	Set-Parameter-ID*	Write device parameters
21h	Status	-	-	-	-	-	-	Reply-Parameter-ID*	
22h	Status	-	-	-	-	-	-	Sync-ID*	
23h	Status	-	-	-	-	-	-	Baud Rate*	
24h	Status	-	-	-	-	-	-	Automatic Bus-Off Recovery	
25h	Status	-	-	-	-	-	-	Cyclic Time	
26h	Status	-	-	-	-	-	-	Cyclic Mode	
27h	Status	-	-	-	-	-	-	Cut-off Frequency Digital Filter, Filter selection	
28h[1]	Status	-	-	-	-	-	-	Zero Offset	
28h[2]	Status	-	-	-	-	-	-	Zero Offset X	
29h[2]	Status	-	-	-	-	-	-	Zero Offset Y	
40h	Status	-	-	-	-	-	-	Load default device parameters (factory defaults)	
50h	Status	-	-	-	-	-	-	Write device parameters in EEPROM	
FFh	Status	SetParamID	SetParamID	SetParamID	SetParamID	SWV0	SWV1	Software reset	
FFh	Status	SetParamID	SetParamID	SetParamID	SetParamID	SWV0	SWV1	Read alive frame (“Boot Up” Message)	

Table 10: Function Codes and Parameters of the Reply Parameter Frames

1 type only: IS1D 00 P20

2 type only: IS2D 90 P20

* Changes to communication parameters such as ID and Baud Rate will take effect after reboot.

5.8 Default Device Parameters

The inclination sensor is delivered with the default device parameters shown in Table 11. These can be restored by a Set Parameter Frame with FSC = 40h (see section 5.7 „Read/Write device parameters“).

Parameter	Default Value	Description
Set-Parameter-ID	300h	CAN 2.0 A Standard Frame
Reply-Parameter-ID	301h	CAN 2.0 A Standard Frame
Sync-ID	100h	CAN 2.0 A Standard Frame
Baud Rate (BR)	0	Automatic Baud Rate Detection
Cyclic Time (CYT)	250	(250 ms
Cyclic Mode (CYM)	0	deactivated
Cut-off Frequency (CF)	2000	2000 mHz = 2 Hz
Zero Offset	0	Off

Table 11: Default Settings of the Device Parameters

These default settings will also be set if invalid device parameters are read from the nonvolatile memory after device reset. If the default settings have been restored this is displayed by the status bit STATUS:DefaultParam =1.

5.9 Transfer of the inclination values

For the transfer of the inclination values the sensor supports following modes:

- Polling Mode
- Synchronous Mode
- Cyclic Mode

All three modes are active at any time and usable at the same time. A switch is not necessary.

5.9.1 Polling Mode

The polling mode is always available. The inclination value of the sensor can be requested via a **Set Parameter Frame**. The inclination sensor replies to that frame via a **Reply Parameter Frame**. Both frames are structured as follows:

FSC	D0	D1	D2	D3	D4	D5	D6
00h	-	-	-	-	-	-	-

Table 12: Request frame: inclination values (FSC = 00h)

FSC	Status	D1	D2	D3	D4	D5	D6
00h	Status	Angle0	Angle1	(CNT0)	(CNT1)	-	-

Table 13: Reply frame: inclination values, type only IS1D 00 P20 (FSC = 00h)

FSC	Status	D1	D2	D3	D4	D5	D6
00h	Status	AngleX0	AngleX1	AngleY0	AngleY1	(CNT0)	(CNT1)

Table 14: Reply frame: inclination values, type only IS2D 90 P20 (FSC = 00h)

Angle0/1: Type only IS1D 00 P20 : Angle value

Format: 16 bit unsigned integer value (1 – 65535)

Conversion:: Value / 100 = angle value

Example: 1065 / 100 = 10,65°

AngleX/Y0/1: Type only IS2D 90 P20: Angle value of the X/Y-axis

Format: 16 bit signed value, complement on two (-9000 ... +9000)

Conversion:: Value / 100 = angle value

5.9.2 Synchronous Mode

The synchronous transmission is used to receive inclination values from more than one sensor at the same time. Therefore the sensor provides a synchronization frame (Default: Sync-ID = 100h). The synchronization frame is a broadcast message to all CAN nodes **without** user data (DLC = **0**). This synchronization frame is transmitted from a bus node (usually the master) cyclically at fixed intervals. All inclination sensors read their current value after reception of the synchronization frame and then transmit the inclination values directly as soon as the bus permits. The replay frame to a synchronization frame is the same as in polling mode (Table 13/14).

5.9.3 Cyclic Mode

The inclination sensor supports the cyclical transmission of the recent position (angle position) after the expiration of a defined time interval. This operation mode can be (de)activated separately and the needed time interval (Cyclic Time) can be parametrized freely. Corresponding to the operational principle shown in Figure 7 the inclination sensor outputs the recent position value in periodical intervals (Cyclic Time) with a Reply Parameter Frame as in the polling mode with additional counter in the following data bytes (Table 13). This 16-bit counter is increased after the end of the set Cycle Time - regardless of whether the telegram was sent or not. Thus, the temporal relation in case of lost frames can be restored.

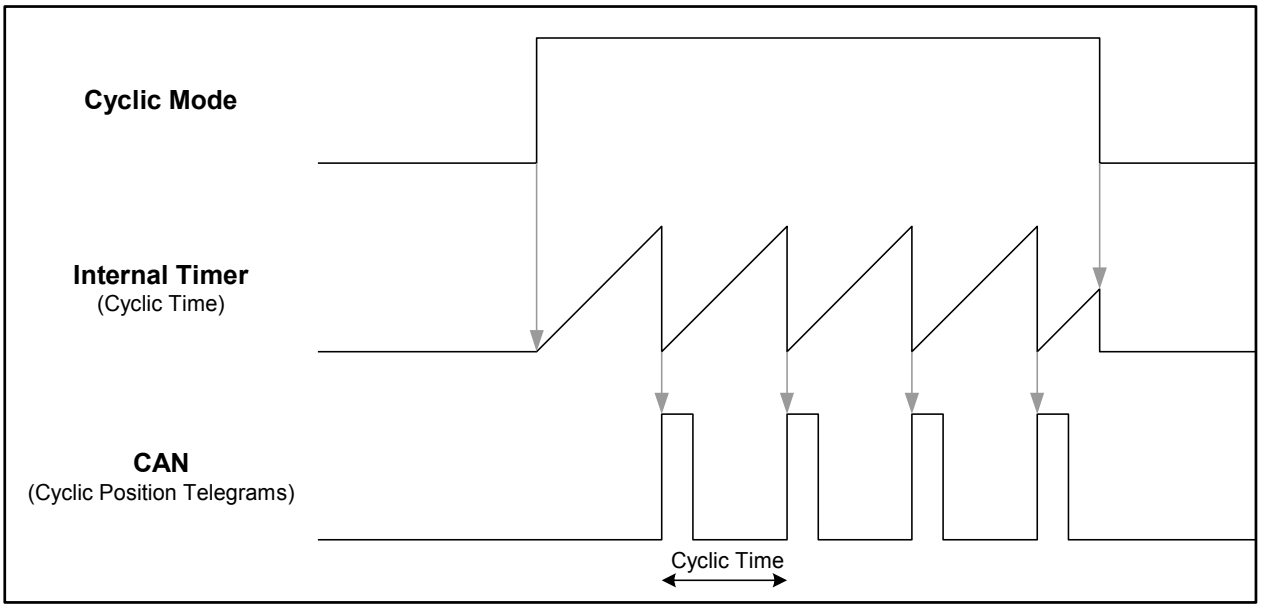

Figure 7: Operational Principle of the Cyclic Mode

5.10 Configuration of the inclination sensor

5.10.1 Configuration of Cyclic Mode

CYZ0/1: Cyclic Time in ms
Format: 16 bit unsigned integer value (1 … 65535)

CYM: (De)activate Cyclic Mode
= 0 → Cyclic Mode deactivated
= 1 → Cyclic Mode activated

The section 5.9.3 „Cyclic Mode“contains a detailed description of the usage of the Cyclic Mode.

5.10.2 Configuration of the CAN Identifier

ID0-3: CAN Identifier (ID), 11-Bit-ID (CAN 2.0 A) or 29-Bit-ID (CAN 2.0 B)
Format: 32 bit value with the following structure:

ID3								ID2								ID1								ID0							
7	6	5	4	3	2	1	0	7	6	5	4	3	2	1	0	7	6	5	4	3	2	1	0	7	6	5	4	3	2	1	0
0	-																				11-Bit-ID (CAN 2.0 A)										
1	-	29-Bit-ID (CAN 2.0 B)																													

Table 15: CAN Identifier

Example: CAN-ID = 361h (29-Bit-ID, CAN 2.0 B)
ID0 = 61h, ID1 = 03h, ID2 = 00h, ID3 = 80h

If a CAN-ID is set newly, it must not be used by another frame type. If this occurs the error bit STATUS:CmdParamError is set in the Reply Parameter Frame and the CAN-ID is refused.

5.10.3 Configuration of the Baud Rate

BR: Code of a Baud Rate
Format: 8 bit unsigned integer value (0 … 10)
Code: 0: Automatic Baud Rate Detection

1: 10 kBit/s	2: 20 kBit/s	3: 50 kBit/s
4 100 kBit/s	5: 125 kBit/s	6: 250 kBit/s
7: 500 kBit/s	8: 800 kBit/s	9: 1 Mbit/s
10: 62.5 kBit/s (additional baud rate)		

5.10.4 Configure Automatic Bus-Off Recovery

ABOR: Enable/Disable Automatic Bus-Off Recovery
= 0 → Enable Automatic Bus-Off Recovery (Device remains in a state Bus-Off)
= 1 → Disable Automatic Bus-Off Recovery (Device starts up again)

5.10.5 Configuration of Cut-off Frequency

CF0/1: Cut-off Frequency in mHz
Format: 16 bit unsigned integer value (100 … 25,000 / 0 = digital filter disabled)

The section 5.1 „Digital Filter“ contains a detailed description.

5.10.6 Configuration of Zero Point Adjustment

OF: Type: IS1D 00 P20: Zero Offset
Format: 16 bit unsigned integer value (0 ... 35.999)

OFX/OFY: Type: IS2D 90 P20: Zero Offset X/Y
Format: 16 bit signed value, two’s complement (-9000 ... +9000)

The section 5.2 „Zero Point Adjustment“contains a detailed description.

5.10.7 Restoration of Default Device Parameters

The sensor can be reset to default device parameters by writing the signature "LOAD" to the sensor (FSC = 40h). Thus the default parameters with the exception of the ID and the Baud Rate are immediately active again. After a software reset of the sensor or a hardware reset, the factory parameter of the IDs and the baud rate take effect again.

D0	D1	D2	D3
'L'	'O'	'A'	'D'
4Ch	4Fh	41h	44h

Table 16: Restore Default Device Parameters

The section 5.8 „Default Device Parameters“ contains a detailed description.

5.10.8 Save Device Parameters

If parameters are changed in the sensor, they take effect immediately, except for the IDs and the Baud Rate. Thus the new parameters are still active after a reset, these must be stored in the internal non-volatile memory. This is done by writing the signature "SAVE" on the FSC = 50h.

D0	D1	D2	D3
'S'	'A'	'V'	'E'
53h	41h	56h	45h

Table 17: Save Device Parameters

6 Sensor configuration

6.1 Inclination sensor programming adapter

With the optional inclination sensor programming adapter (starter kit) it is possible to adjust all inclination sensors with CAN/CANopen, current or voltage interface. It consists of a programming adapter that is connected via USB to a PC. The connection with the programming adapter is realized through various, also included adapter cables. The inclination sensor is supplied with power through this. An additional power supply is not necessary.

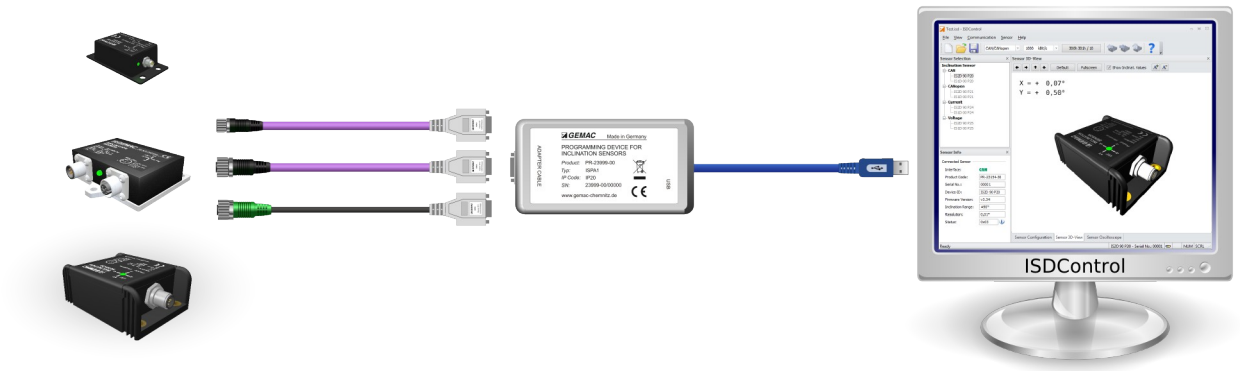

Figure 8: Starter kit

6.2 PC software ISDControl

The parametrization of all possible values is done with the PC software ISDControl, which is included in all starter kits. Each configuration can then be stored in a file.

Properties:

- comfortable configuration of all parameters of the inclination sensor
- 3D imaging and display of the current angle
- Oscilloscope display of the current angle
- Firmware Download option
- Automatic inclination sensor search for unknown communication parameters

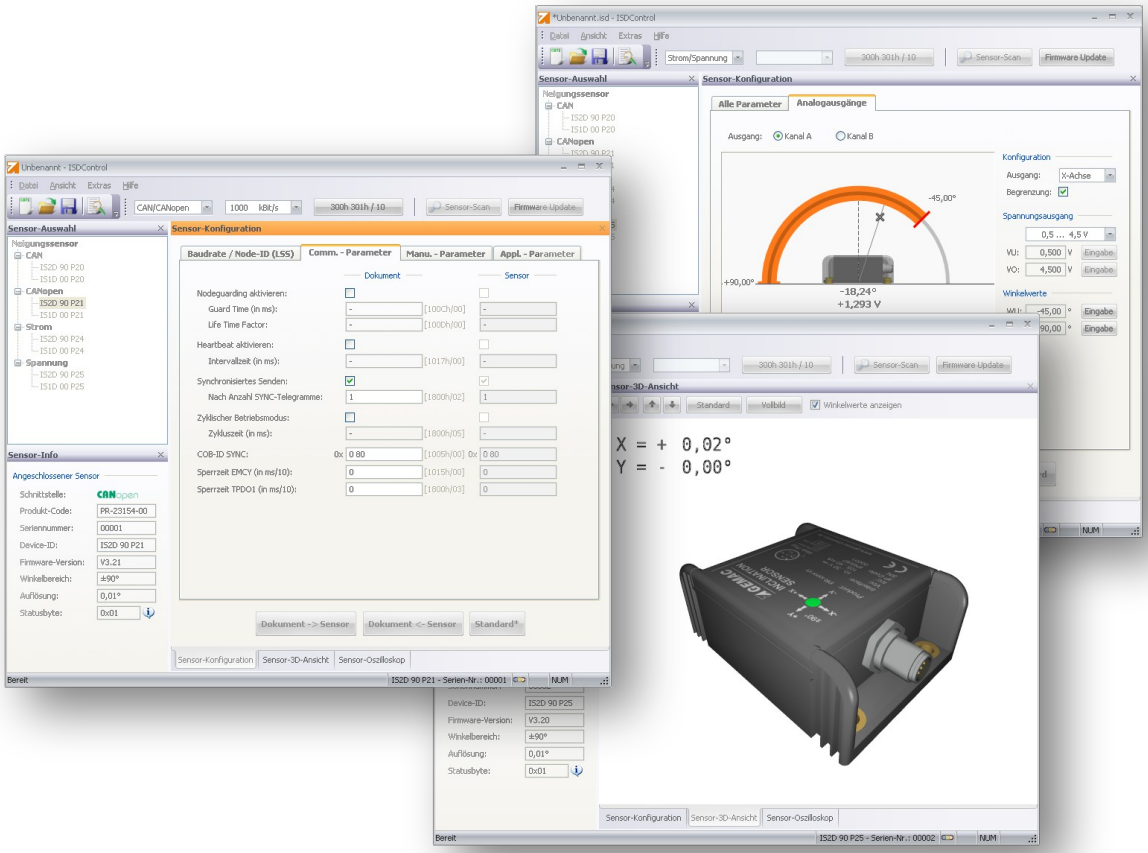

Figure 9: PC software

7 Ordering Information

Article Number	Product Type	Description/Distinction
PR-23050-30	IS1D 00 P20	CAN, 1-dimensional, 360°, plastic housing
PR-23020-30	IS1D 00 P20	CAN, 1-dimensional, 360°, metal housing
PR-23054-30	IS2D 90 P20	CAN, 2-dimensional, ±90°, plastic housing
PR-23024-30	IS2D 90 P20	CAN, 2-dimensional, ±90°, metal housing
PR-23999-01	ISPA1	Inclination sensor programming adapter (Starter kit including programming adapter, cables and PC software)

Table 18: Ordering Information