Level Plus®

Magnetostrictive Liquid-Level Sensors
with Temposonics® Technology

M-Series Model MC420
Transmitter with Analog Output

Data Sheet

Document Part Number
550752 Revision F

FEATURES

- **4 to 20 mA Output with HART®**
- **Single Channel Output**
- **Level Measurements**
  - **Product**
  - **Interface**
- **No Scheduled Maintenance or Recalibration**
- **High Accuracy and Repeatability**
- **Intrinsically Safe (I.S.)**

APPLICATIONS

- **General Process**
- **Industrial Chemicals**
- **Solvents**
- **Detergents and Soaps**
- **Lubricating Oils**

MARKETS

- **Petrochemical**
- **Chemical**
- **Water and Wastewater**

Product overview

The Level Plus® Model MC420 level transmitter satisfies the demand for an economical analog communication interface offering for hazardous area applications. The Model MC420 provides a single-channel analog 4 to 20 mA output for either a product level or an interface level measurement depending on the application and the selected float. The Model MC420 transmitter is approved by FM, CSA, and ATEX for use in Intrinsically Safe applications. Appropriate barriers are required when installing the Model MC420 transmitter in hazardous areas.

In addition to the single-channel 4 to 20 mA loop, the Model MC420 transmitter provides the HART® field communications protocol for setup and calibration. Calibration can also be accomplished using integrated reed switches and a supplied magnet without the need for expensive electronics. Once the transmitter is installed and calibrated there is no requirement for scheduled maintenance or recalibration. ***Set it and forget it!***

The Model MC420 transmitter is available in set lengths from 457 mm (18 in.) to 5486 mm (216 in.) and can be installed in applications with process temperatures between -40 °C (-40 °F) to 125 °C (257 °F). The electronics are permanently sealed in a NEMA Type 4X rated housing made of 316L stainless steel that provides protection against corrosion and resistance to harsh process conditions.

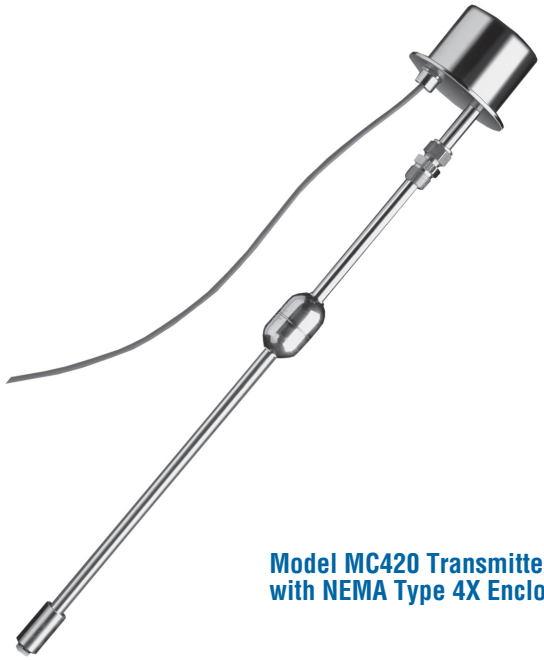

Model MC420 Transmitter with NEMA Type 4X Enclosure

Product specifications

Parameters	Specifications
LEVEL OUTPUT	
Measured variable:	Product level and interface level
Output signal and Protocol:	4 to 20 mA with HART®
Order length:	**Rigid pipe:** 457 mm (18 in.) to 5486 mm (216 in.) § § Order length equals the measurement range plus the inactive zone.
Non-linearity:	0.02% F.S. or 0.794 mm (1/32 in.)* * Whichever is greater
Repeatability:	0.01% F.S. or 0.381 mm (0.015 in.)* (any direction) * Whichever is greater
ELECTRONICS	
Input voltage:	10.5 to 36.1 Vdc 28 Vdc maximum for I.S. ATEX approved
Fail safe:	High (21.4 mA), Low (3.8 mA)
Reverse polarity protection:	Series diode
Lightning/ Transient protection:	**Stage 1:** Line-to-ground surge suppression; IEC 61000-4-5 **Stage 2:** Line-to-line and line-to-ground transient suppressors; IEC 61000-4-4
CALIBRATION	
Zero adjust range:	Anywhere within the active length
Span adjust range:	Full scale to 152 mm (6 in.) from zero

Parameters	Specifications
ENVIRONMENTAL	
Enclosure rating:	NEMA Type 4X
Humidity:	0 to 100% relative humidity, noncondensing
Operating temperatures:	**Electronics:** -34 °C (-30 °F) to 71 °C (160 °F) **Sensing element:** -40 °C (-40 °F) to 125 °C (257 °F) ◊ ◊ Contact factory for specific temperature ranges.
Vessel pressure:	Dependent on float pressure, contact factory for more information
Materials:	**Wetted parts:** 316L stainless steel **Non-wetted parts:** 316L stainless steel
FIELD INSTALLATION	
Housing dimensions:	**NEMA Type 4X:** 81 mm (3.2 in.) by 123 mm (4.85 in.) O.D.
Mounting	**Rigid pipe:** ¾ in. Adjustable NPT fitting
Wiring	**Integral cable:** 4.5 m (15 ft.) 2-wire integral cable, shielded
Electrical Connections	**NEMA Type 4X:** ½ in. conduit opening

Agency Approvals

Intrinsically Safe

FM3610 **C22.2 No. 157**	Class I, Division 1, Groups A, B, C and D Class II, Division 1, Groups E, F and G Class III, T4 Division 1, NEMA Type 4X
EN 50020	PTB 00 ATEX 2069X Ex II 1/2 G bzw. II 2 G EEx ia IIB T4 bzw. EEx ia IIA T4

MTS Analog Setup software

MTS has developed the MTS Setup Software to help customers program and customize their Level Plus Model MC420 transmitter.

The Model MC420 transmitter is programmed through a HART interface. This interface is easily connected to a PC by using a HART-to-Serial converter. The MTS Analog Setup Software allows the user to adjust *'Zero'* (4 mA) and *'Span'* (20 mA) setpoints and adjust HART parameters.

MTS setup software is shipped with each transmitter order. However, if you require an additional copy or an upgrade to your currently installed setup software, updates are available for download from the following MTS Level Products support page.

http://www.mtssensors.com*/support/liquid-level-product-data-sheets-manuals-drawings/index.html*

HART® handheld communicator programming

The Level Plus Model MC420 transmitter programming can also be performed by using a handheld HART communicator device such as the *Rosemount® 375 or 475*.

Transmitter calibration

Calibration can also be accomplished without the use of any electronic equipment. MTS supplies a custom setpoint magnet with each MC420 level transmitter. The magnet is used to set the *'Zero'* (4 mA) and *'Span'* (20 mA) setpoints.

Setpoint adjustment locations *(as shown below)* are found at the bottom of the transmitter housing *(as shown below)*. Both Zero and Span setting locations are identified with ***'Z'*** (for Zero) and ***'S'*** (for Span). To set the Zero (4 mA) setpoint, adjust the float to the appropriate level and insert the magnet into the circular ***'Z'*** recess. To set the Span (20 mA) setpoint adjust the float to the appropriate level insert the magnet into the circular ***'S'*** recess.

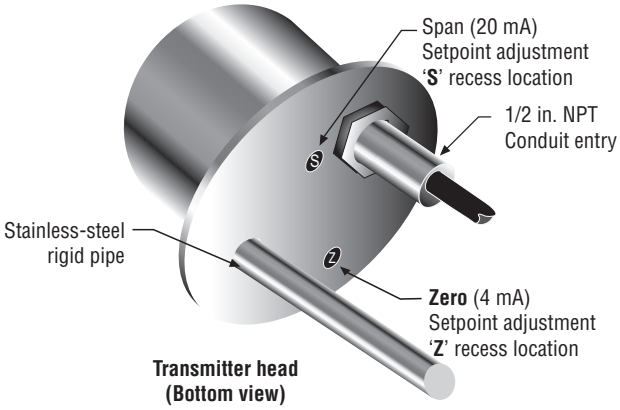

Product dimensions and mounting

MTS offers the Level Plus Model MC420 transmitter configured with a rigid pipe constructed of 316L stainless steel *(see illustration below)*. The rigid pipe configuration can be ordered in lengths from 457 mm (18 in.) to 5486 mm (216 in.). The Model MC420 comes standard with a ¾ in. NPT Adjustable fitting as its process connection, which allows the transmitter order length to be adjusted (within a few inches) if the tank height and order length are not exactly equal.

The '*Measuring range*' of the MC420 transmitter is equal to the '*Order length'* minus the '*Inactive zone'* of 76 mm (3.0 in.). The transmitter can be ordered with a single standard product float *(part number 251981-X)*, or can include an optional non-standard float *(Refer to the Level Plus Accessories Catalog, document no. 551103 for optional float selections)*.

The '*stop collar'* option must be ordered separately if you choose a non-standard float. This option is designed to keep the float out of the inactive zone. The placement of the stop collar is dependent on the float and placement of the magnet.

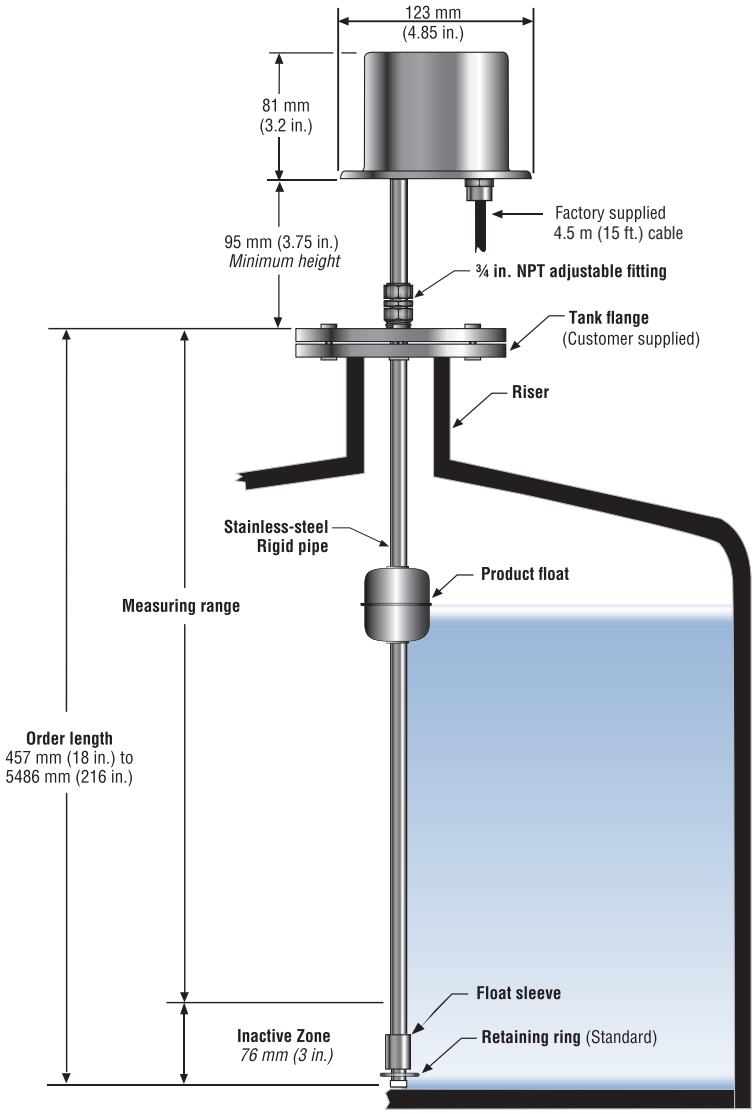

Ordering information

TRANSMITTER MODEL = M C 4 2 0 (1 - 5)

M-Series Model MC420 liquid-level transmitter
Comes with one standard product level float *(part number 251981-X, see Standard float section below).*

TRANSMITTER ORDER LENGTHS ¤ = ☐☐☐ (6 - 8)

Length	Code	Length	Code	Length	Code
457 mm (18 in.)	= 018	1829 mm (72 in.)	= 072	3658 mm (144 in.)	= 144
508 mm (20 in.)	= 020	2134 mm (84 in.)	= 084	3962 mm (156 in.)	= 156
610 mm (24 in.)	= 024	2438 mm (96 in.)	= 096	4267 mm (168 in.)	= 168
914 mm (36 in.)	= 036	2743 mm (108 in.)	= 108	4572 mm (180 in.)	= 180
1219 mm (48 in.)	= 048	3048 mm (120 in.)	= 120	4877 mm (192 in.)	= 192
1524 mm (60 in.)	= 060	3353 mm (132 in.)	= 132	5182 mm (204 in.)	= 204
				5486 mm (216 in.)	= 216

¤ Standard Range/lengths 457 mm (18 in.) to 5486 mm (216 in.)

OPTIONAL ACCESSORIES = ☐☐ (9 - 10)

FM / CSA Approved

00 = Standard float (part no.: 251981-1)
F0 = Non-Standard float ¥‡
T0 = Standard float with Stainless-steel tag
FT = Non-standard float with Stainless-steel tag ¥‡

ATEX Approved

0P = Standard float (part no.: 251981-2) with blue cable
FP = Non-standard float with blue cable ¥‡

No Approval

0N = Standard float (part no.: 251981-2) with gray cable
FN = Non-standard float with gray cable ¥‡

¥ Non-standard floats must be ordered separately.
‡ Requires a stop collar, part no.: 560369-1 (Which must be ordered separately)

Standard Product Float and Optional Hardware

Listed below is the standard float for general applications. Please consult the factory for help in selecting the correct float for your application. For detailed information about all liquid-level product accessories, refer to the *'Level Plus Accessories Catalog, document No. 551103'* available in PDF format at ***http://www.mtssensors.com****/products/liquid-level-sensors/accessories/index.html*

STANDARD PRODUCT FLOAT (INCLUDED)

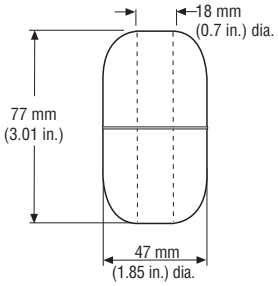

Pressure	Temp.	Magnet Offset	Specific Gravity	Material	Weight Offset	Part Number
29.3 bar (425 psi)	149 °C (300 °F)	No	0.65	SS	No	251981-1
					Yes	251981-2

OPTIONAL HARDWARE

		PART NUMBER
	Stainless Steel tag (I.D. tag)	250857
	**Stainless-steel stop collar** (Required when ordering non-standard float options ***'F0', 'FT', 'FN'*** or ***'FP'***)	560369-1

Programming and Hardware

SETUP SOFTWARE		PART NUMBER
	**M-Series Model MC420** PC setup software on CD Includes HART adapter, part no. 380068	252273-1
	M-Series Model MC420 PC setup software on CD	252273-2

PANEL-MOUNTED UNIVERSAL ANALOG PROCESS METER		PART NUMBER
	**LED Display Universal Process Meter** (Does not include relay)	380071
	LED Display Universal Process Meter (includes 2 relays)	380072
	LED Display Universal Process Meter (includes 2 relays and 4 to 20 mA output)	380095
	LED Display Universal Process Meter (includes 4 relays)	380073
	Enclosure options NEMA Type 4X (Single Display Meter) NEMA Type 4X (Two Display Meters)	 401150 401151

Document Part Number: 550752 Revision F 04-10

MTS Systems Corporation
Sensors Division

3001 Sheldon Drive
Cary, North Carolina
27513, USA
Tel.: +1-800-633-7609
Fax: +1-919-677-2343
+1-800-498-4442
e-mail: sensorsinfo@mts.com
http://www.mtssensors.com

MTS Sensor Technologie
GmbH & Co. KG

Auf dem Schüffel 9
D - 58513 Lüdenscheid, Germany
Tel.: +49-2351-9587-0
Fax: +49-2351-56491
e-mail: info@mtssensor.de
http://www.mtssensor.de

MTS Sensors Technology
Corporation

737 Aihara-cho, Machida-shi
Tokyo 194-0211, Japan
Tel.: +81-42-775-3838
Fax: +81-42-775-5516
e-mail: info@mtssensor.co.jp
http://www.mtssensor.co.jp